BOXER
5KD Series Diaphragm Pump
Gas Flow Rate to 10 l/m

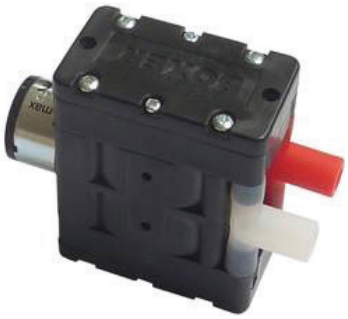

DESCRIPTION
The 5KD series double headed diaphragm pumps have a unique design and high performance to size ratio. They have integrated pulsation chambers that substantially reduces pulsation.

Iron core and coreless DC motor options are offered in this series.

Like all other pumps in the Boxer range, this series can be customized to specific OEM requirements.

SPECIFICATIONS

GENERAL
Free Flow: 10.0 l/m
Max Pressure: 600 mbar (8.7 PSI)
Max Vacuum: -400 mbar (11.8 in. Hg)
Brushed Motor: 12, 24 & 6 VDC
Housing Material: PPS (Polyphenylene Sulphide)
Diaphragm Material: EPDM
Valve Material: Silicone
Tubing Connection: 5.5 MM
Weight; 140g

FLOW PERFORMANCE (AT NOMINAL PUMP VOLTAGE)

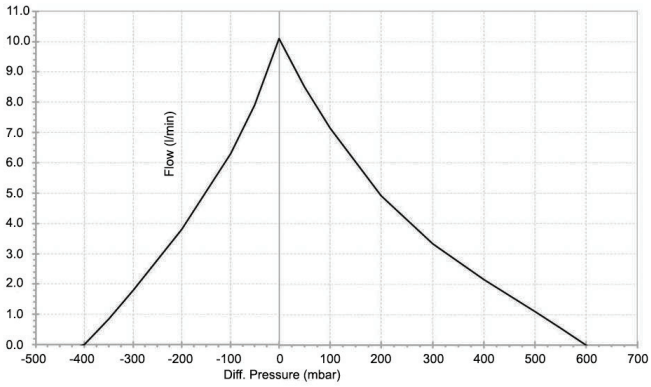

ORDERING INFORMATION

Model	Motor Type	Nominal Pump Voltage (VDC)	Nominal Motor Voltage (VDC)
5212.002	Iron Core- Economic	12	12
5312.001	Iron Core	12	12
5312.002	Iron Core	24	24
5112.002	Coreless	6	12
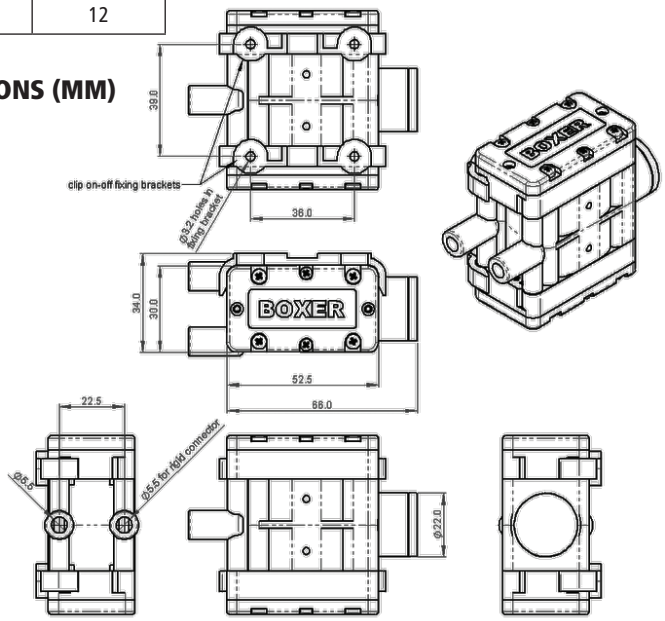
DIMENSIONS (MM)